



Features

- 15.6” New Generation Stainless Steel Panel PC
- 12th/13th Gen. Intel Core i3/i5 BGA Type Processor
- True Flat Front Bezel Design and Grade 304 Stainless Steel Enclosure (Grade 316 for Option)
- IP66/IP69K Rated with M12 Connectors
- Support Resistive Touch, Projected Capacitive Touch
- Touch on/off Button on the Side Edge for Hygienic Cleaning
- Support Ergonomic Versatile Mounting: Yoke Mounting / Space-saving VESA 75 x 75mm Mounting

Specifications

System	
CPU	Intel Core i3-1215U Processor, 6C8T, 10M Cache, 1.2GHz, TDP=15W Intel Core i5-1235U Processor, 10C12T, 10M Cache, 1.3GHz, TDP=15W
System Chipset	SoC
Memory	2 x 260-pin SO-DIMM up to 64GB DDR4 3200MHz
TPM	TPM 2.0

I/O Port	
USB	1 x M12 8-pin for USB 2.0 with waterproof cover
Serial / Parallel	1 x M12 8-pin COM1, RS-232/422/485, default RS-232, with waterproof cover
LAN	1 x M12 8-pin for GbE LAN with waterproof cover
Power Connector	1 x M12 3-pin for DC

Storage	
SSD	1 x M.2 2280 M-Key (PCIex4)

Control Button	
Power On/Off	1 x Power button on the back
Touch Screen On/Off	1 x Touch screen on/off switch button at the right side

Expansion	
Optional I/O Ports	2 x optional blank M12 connector with waterproof cover for selecting two from the following options: ・2 x USB 2.0 ・1 x COM ・1 x USB 3.2 Gen1 ・1 x HDMI ・1 x GbE LAN
Expansion slot	1 x M.2 3402/3052 B-Key (PCIe x1, USB3.2 Gen1) for optional LTE/5G module 1 x M.2 2230 E-Key (USB2.0, PCIe x1) for optional Wi-Fi/BT module 1 x Nano-SIM card
RFID module	RFID module design on the front side (for option)

Dispalay	Standard		High Brightness Optional	
Display Type	15.6" TFT-LCD		15.6" TFT-LCD	
Max. Resolution	default	optional	default	optional
	1366 x 768	1920 x 1080	1366 x 768	1920 x 1080
Max. Color	16.7M	16.7M	16.7M	16.7M
Luminance (cd/m^2)	400	500	1000	1000
View Angle	170(H)/160(V)	178(H)/178(V)	160(H)/160(V)	170(H)/170(V)
Contrast	500:1	1000:1	500:1	1000:1
Backlight Lifetime	50,000 hrs	50,000 hrs	50,000 hrs	50,000 hrs

Touch Screen	
Type	Resistive Touch (DR model) / Projected Capacitive Touch (DP model)
Interface	USB
Light Transmission(%)	Resistive Touch : 80% / Projected Capacitive Touch : 90%

Dimensions

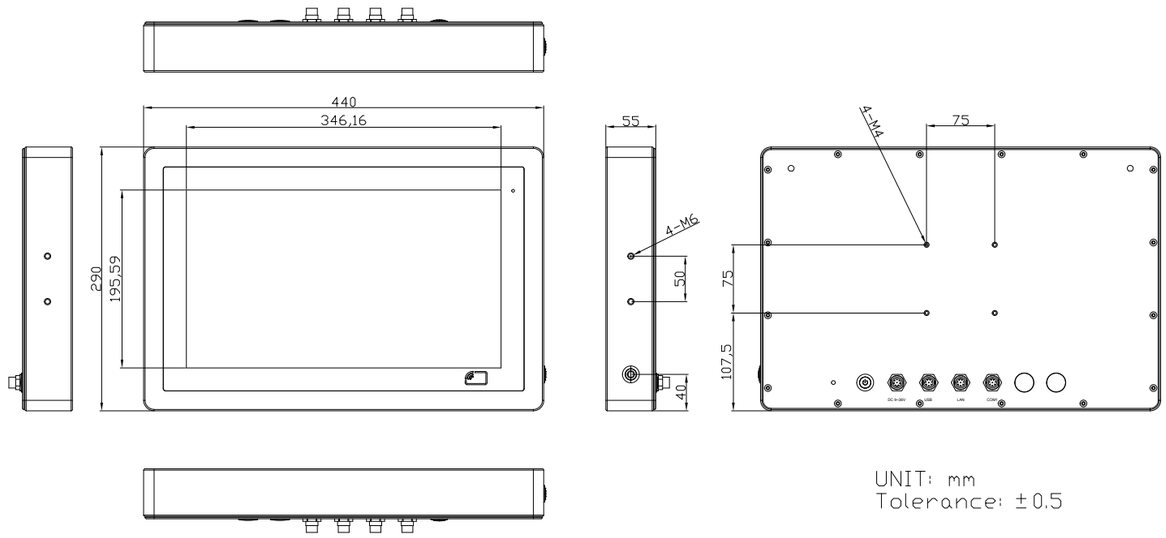

UNIT: mm
Tolerance: ±0.5

Power	
Power Input	DC 9~36V
Power Consumption	TBD

Mechanical	
Construction	304 Stainless steel chassis(default), 316 Stainless steel chassis(optional)
Mounting	VESA mount 75 x 75, Yoke mount for optional
IP Rating	Total IP66/IP69K
Dimensions	440 x 290 x 55 mm
Net Weight	6.64 kg

Environmental	
Operating Temperature	0~50°C / -20~60°C (optional w/ WT RAM/SSD)
Storage Temperature	-30~70°C
Humidity	10 to 95% @ 40°C, non-condensing
Certificate	CE/FCC Class A

Operating System Support
Windows 10, Windows 11

Ordering Information	
ViTAM-916DP	15.6" WXGA IP66/IP69K Stainless Steel Panel PC, Intel 12th/13th Gen. Core i Processor, 2 x SO-DIMM DDR4 slots, Projected Capacitive Touch, 9~36V DC power input
ViTAM-916DR	15.6" WXGA IP66/IP69K Stainless Steel Panel PC, Intel 12th/13th Gen. Core i Processor, 2 x SO-DIMM DDR4 slots, 5 wire Resistive Touch Window, 9~36V DC power input
ViTAM-916DPH	15.6" WXGA IP66/IP69K Stainless Steel Panel PC, Intel 12th/13th Gen. Core i Processor, 2 x SO-DIMM DDR4 slots, Projected Capacitive Touch, 9~36V DC power input, 1000 nits
ViTAM-916DRH	15.6" WXGA IP66/IP69K Stainless Steel Panel PC, Intel 12th/13th Gen. Core i Processor, 2 x SO-DIMM DDR4 slots, 5 wire Resistive Touch Window, 9~36V DC power input, 1000 nits

V 1.2

All specifications and photos are subject to change without notice.
Industrial Panel PC