



Features

- 21.5” New Generation Stainless Steel Panel PC
- 12th/13th Gen. Intel Core i3/i5 BGA Type Processor
- True Flat Front Bezel Design and Grade 304 Stainless Steel Enclosure (Grade 316 for Option)
- IP66/IP69K Rated with M12 Connectors
- Support Resistive Touch, Projected Capacitive Touch
- Touch on/off Button on the Side Edge for Hygienic Cleaning
- Support Ergonomic Versatile Mounting: Yoke Mounting / Space-saving VESA 100 x 100mm Mounting

Specifications

System	
CPU	Intel Core i3-1215U Processor, 6C8T, 10M Cache, 1.2GHz, TDP=15W Intel Core i5-1235U Processor, 10C12T, 10M Cache, 1.3GHz, TDP=15W
System Chipset	SoC
Memory	2 x 260-pin SO-DIMM up to 64GB DDR4 3200MHz
TPM	TPM 2.0

I/O Port	
USB	1 x M12 8-pin for USB 2.0 with waterproof cover
Serial / Parallel	1 x M12 8-pin COM1, RS-232/422/485, default RS-232, with waterproof cover
LAN	1 x M12 8-pin for GbE LAN with waterproof cover
Power Connector	1 x M12 3-pin for DC

Storage	
SSD	1 x M.2 2280 M-Key (PCIex4)

Control Button	
Power On/Off	1 x Power button on the back
Touch Screen On/Off	1 x Touch screen on/off switch button at the right side

Expansion	
Optional I/O Ports	2 x optional blank M12 connector with waterproof cover for selecting two from the following options: ・2 x USB 2.0 ・1 x COM ・1 x USB 3.2 Gen1 ・1 x HDMI ・1 x GbE LAN
Expansion slot	1 x M.2 3402/3052 B-Key (PCIe x1, USB3.2 Gen1) for optional LTE/5G module 1 x M.2 2230 E-Key (USB2.0, PCIe x1) for optional Wi-Fi/BT module 1 x Nano-SIM card
RFID module	RFID module design on the front side (for option)

Display	Standard	High Brightness Optional
Display Type	21.5" TFT-LCD	21.5" TFT-LCD
Max. Resolution	1920 x 1080	1920 x 1080
Max. Color	16.7M	16.7M
Luminance (cd/m^2)	250	1000
View Angle	178(H) /178(V)	178(H) /178(V)
Contrast	1000:1	1000:1
Backlight Lifetime	50,000 hrs	50,000 hrs

Touch Screen	
Type	Resistive Touch (for DR model) Projected Capacitive Touch (for DP model)
Interface	USB
Light Transmission(%)	Resistive Touch : 80% / Projected Capacitive Touch : 90%

Dimensions

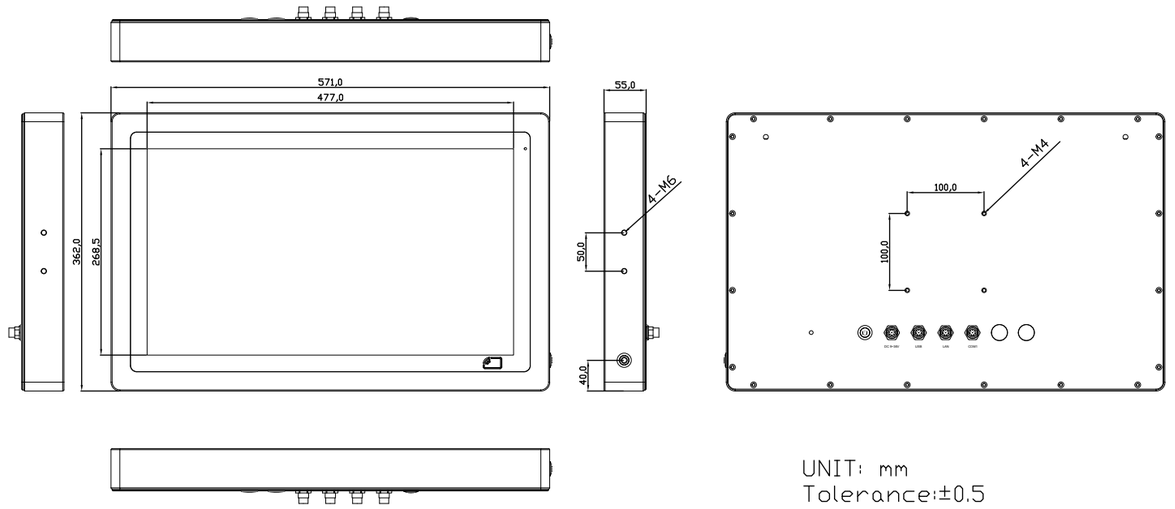

UNIT: mm
Tolerance:±0.5

Power	
Power Input	DC 9~36V
Power Consumption	89.06W

Mechanical	
Construction	304 Stainless steel chassis(default), 316 Stainless steel chassis(optional)
Mounting	VESA mount 100 x 100, Yoke mount for optional
IP Rating	Total IP66/IP69K
Dimensions	571 x 362 x 55 mm
Net Weight	9.75 kg

Environmental	
Operating Temperature	0~50°C (ambient w/ air flow)
Storage Temperature	-30~70°C
Humidity	10 to 95% @ 40°C, non-condensing
Certificate	CE/FCC Class A

Operating System Support
Windows 10, Windows 11

Ordering Information	
ViTAM-921DP	21.5" FHD IP66/IP69K Stainless Steel Panel PC, Intel 12th/13th Gen. Core i Processor, 1 x SO-DIMM DDR5 slot, Projected Capacitive Touch, 9~36V DC power input
ViTAM-921DR	21.5" FHD IP66/IP69K Stainless Steel Panel PC, Intel 12th/13th Gen. Core i Processor, 1 x SO-DIMM DDR5 slot, 5 wire Resistive Touch Window, 9~36V DC power input
ViTAM-921DPH	21.5" FHD High Brightness IP66/IP69K Stainless Steel Panel PC, Intel 12th/13th Gen. Core i Processor, 1 x SO-DIMM DDR5 slot, Projected Capacitive Touch, 9~36V DC power input
ViTAM-921DRH	21.5" FHD High Brightness IP66/IP69K Stainless Steel Panel PC, Intel 12th/13th Gen. Core i Processor, 1 x SO-DIMM DDR5 slot, 5 wire Resistive Touch Window, 9~36V DC power input

V 1.3

All specifications and photos are subject to change without notice.
Industrial Panel PC